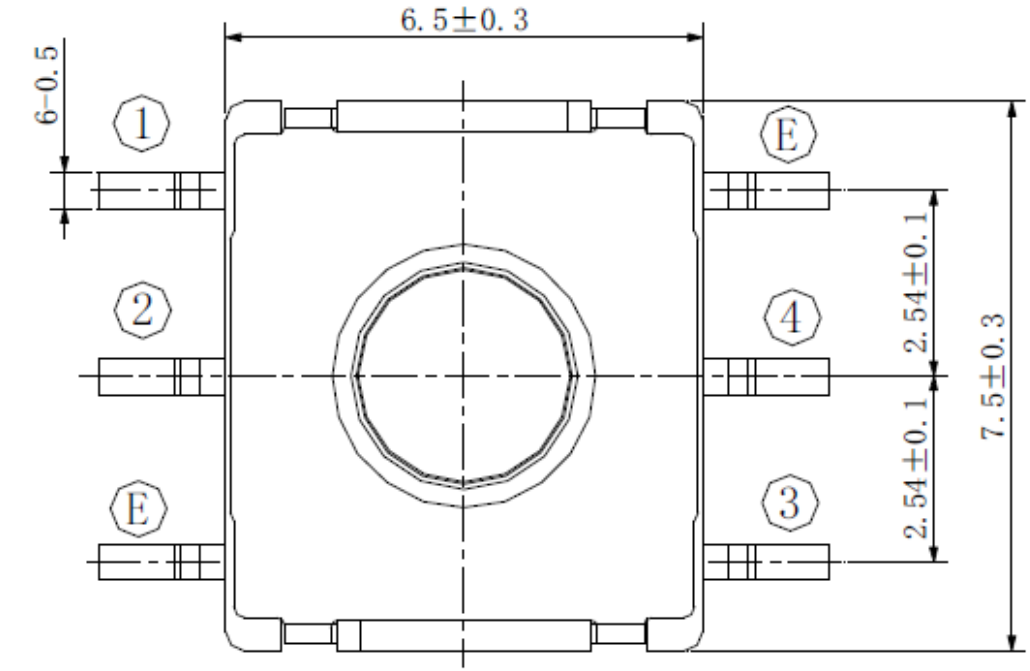
6.5±0.3
6-0.5
1
2
E
E
4
3
2.54±0.1
2.54±0.1
7.5±0.3

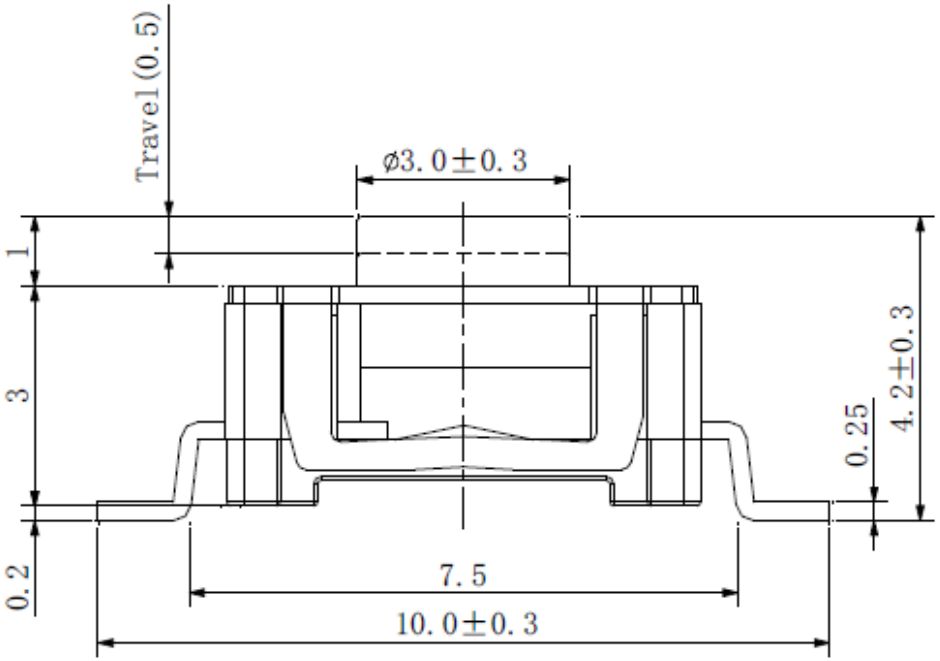
Travel(0.5)
ø3.0±0.3
1
3
0.2
0.25
4.2±0.3
7.5
10.0±0.3