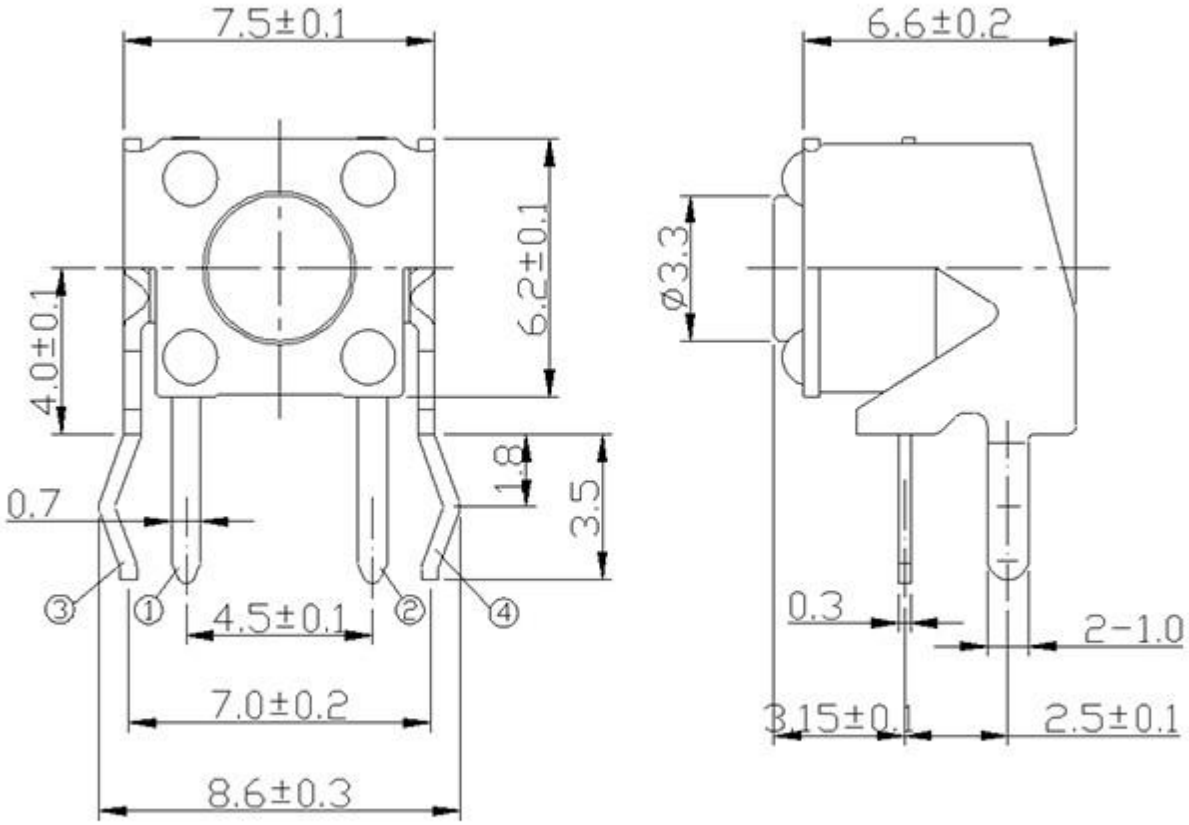
7.5±0.1
6.6±0.2
6.2±0.1
4.0±0.1
Ø3.3
1.8
3.5
0.7
③
①
②
④
4.5±0.1
0.3
2-1.0
7.0±0.2
3.15±0.1
2.5±0.1
8.6±0.3