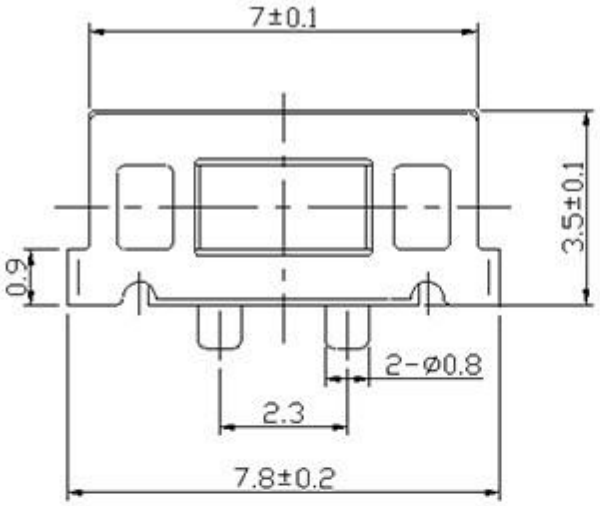
7±0.1
3.5±0.1
0.9
2-ø0.8
2.3
7.8±0.2

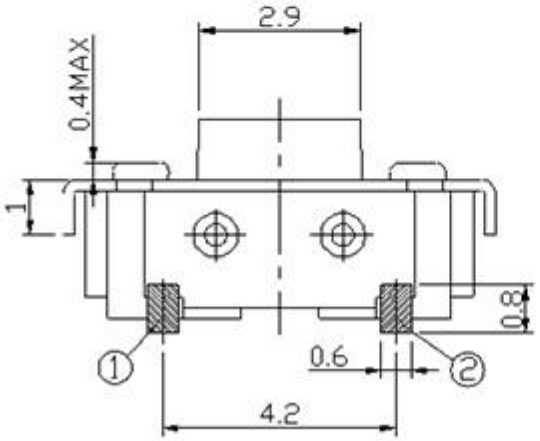
2.9
0.4MAX
1
0.8
0.6
①
②
4.2

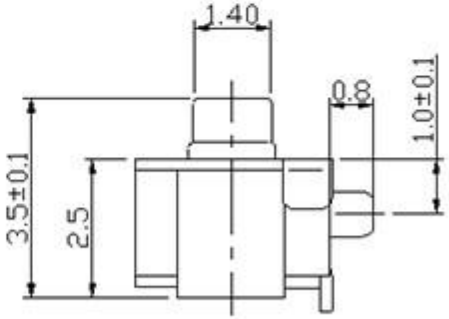
1.40
0.8
1.0±0.1
3.5±0.1
2.5