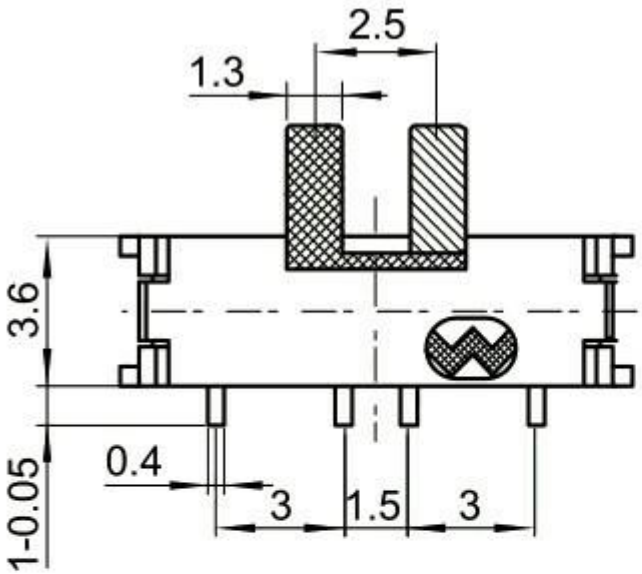
2.5
1.3
3.6
0.4
1-0.05
3
1.5
3

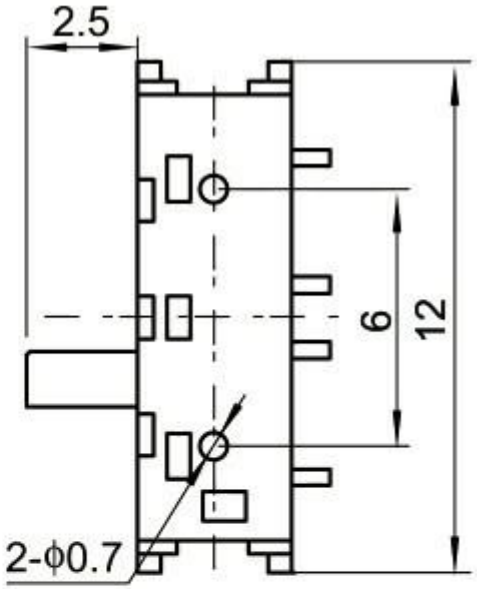
2.5
6
12
2-ϕ0.7

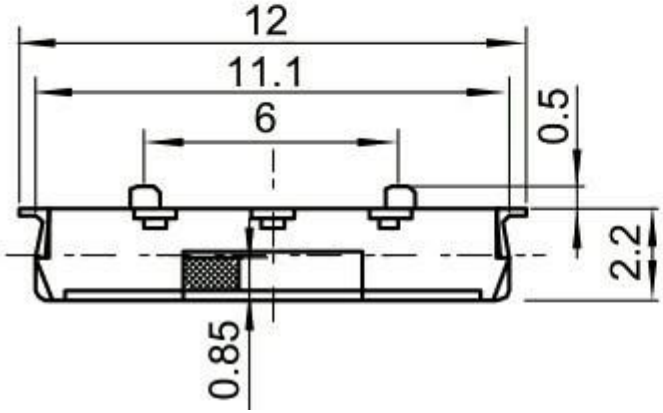
12
11.1
6
0.5
2.2
0.85