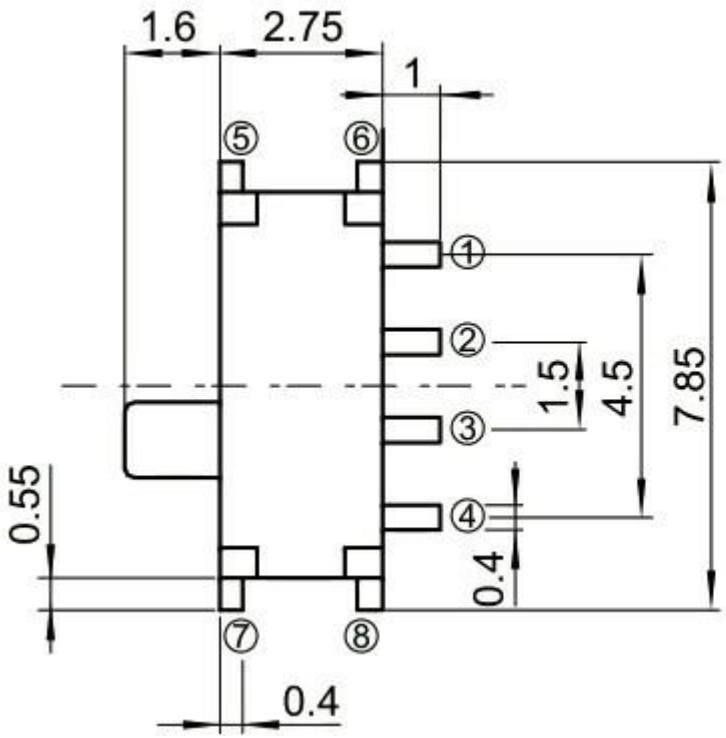
1.6
2.75
1
⑤
⑥
①
②
③
④
⑦
⑧
1.5
4.5
7.85
0.55
0.4
0.4

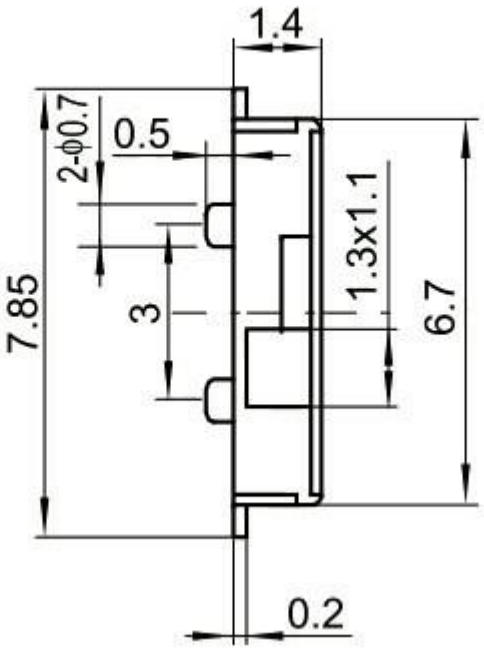
1.4
2-φ0.7
0.5
7.85
3
1.3x1.1
6.7
0.2

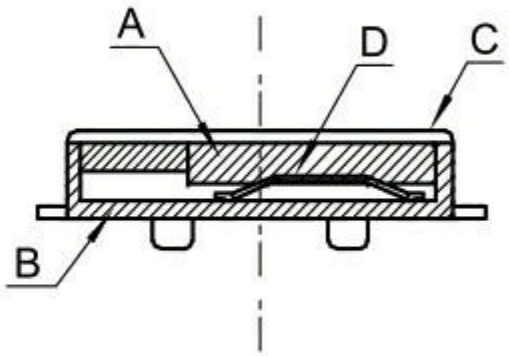
A
D
C
B