外形图 / Dimensions

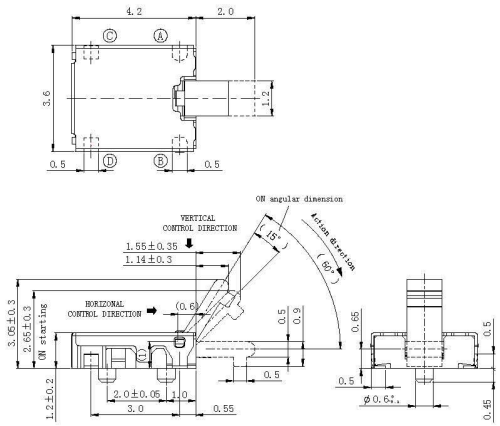

印刷电路板安装孔以及焊接处尺寸图 / PC board mounting hole and land dimensions

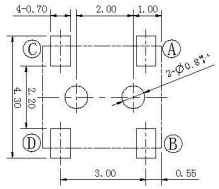

电路图 / Circuit Diagram

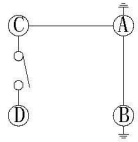

选型原则 / HOW TO ORDER

CG - V □ □ □ - 11 - □

- R=TAPE&REEL
- 1 POLES 1 THROW
- EMPTY=BASE WITH PILOT
  N=NO PILOT
- 01=NORMALLY CLOSE
  02=NORMALLY OPEN
- U=U TYPE TERMINAL
  F=F TYPE TERMINAL
- V=VERTICAL
- DETECTOR SWITCH G TYPE